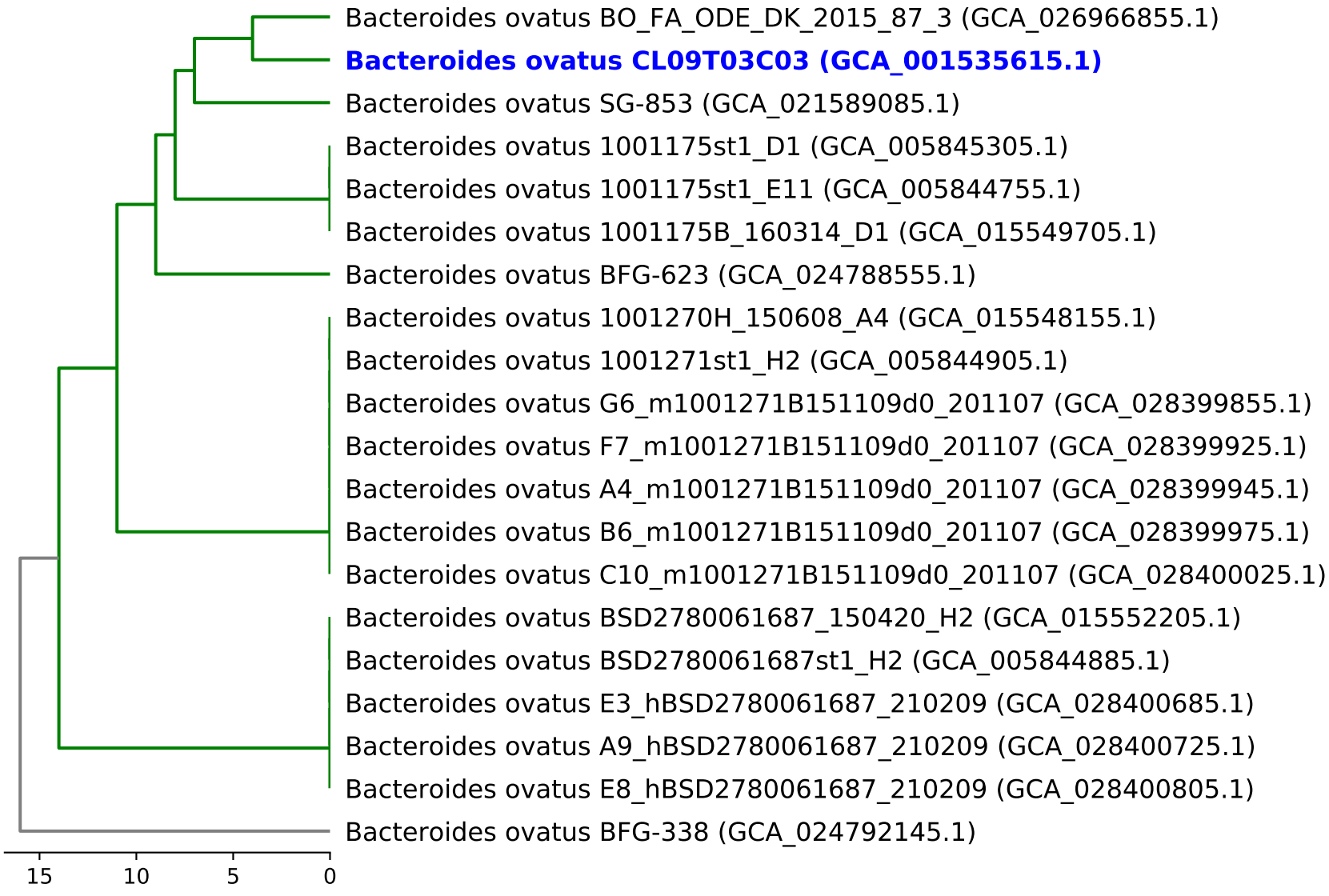Dendrogram of cgMLST analysis (based on 516 loci)