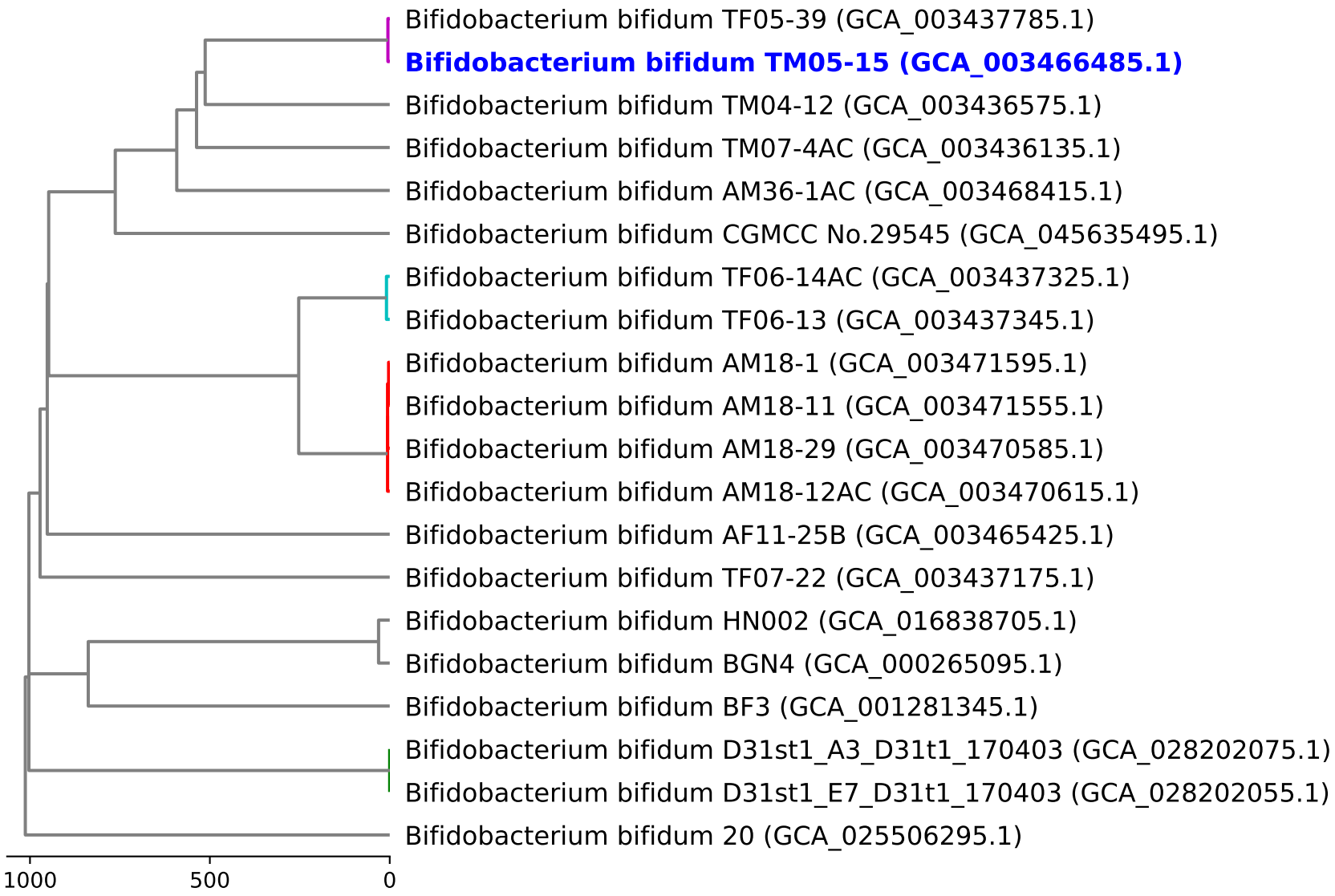Dendrogram of cgMLST analysis (based on 1198 loci)